CASTEO TA M





Table consisting of two 50x40x2 mm tubular steel supports and top with 4 mm thick folded steel sheet frame and 30x15x1.5 mm steel tube.
All metal parts are galvanised and coated with thermosetting polyester powder.
All fixings are in AISI304 stainless steel.
Prepared for ground fixing through M10 threaded bars to cement (included).

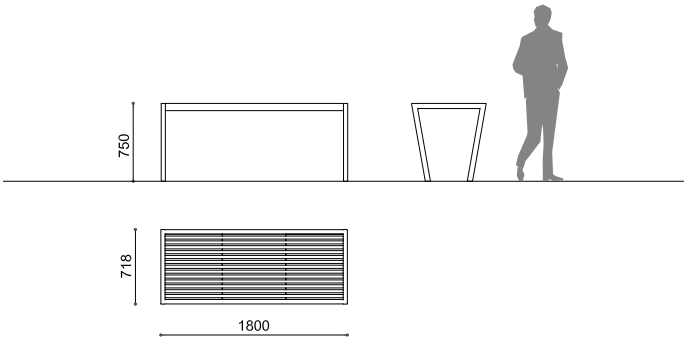

technical data

1800x718 mm
H 750 mm

53 kg

Galvanised and powder coated steel

Prepared for ground fixing through M10 threaded bars to cement (included)

CITY DESIGN is a brand of Metalco Srl
via della Fornace, 44
31023 Castelminio di Resana (TV) Italy

Subject to management and coordination activities of Holding Agora SAS

T + 39 0423.7863
F + 39 0423. 786400
citydesign.it | info@citydesign.it

Metalco Srl reserves the right to modify the technical characteristics indicated above without notice