ENG

ZOID PN





Rectangular table with integrated seating consisting of a 60x30x2 tubular frame with an 8 mm thick HPL top and four 40x2 curved round steel tube supports onto which the rectangular 8 mm thick HPL seats are fixed and to the base of which 5 mm thick round flanges are welded. The table on both short sides allows wheelchair access
All metal parts are galvanised and coated with thermosetting polyester powder.
All fixings are in AISI304 stainless steel.
Prepared with holes Ø 12 mm for ground fixing with mechanical dowels (not included).

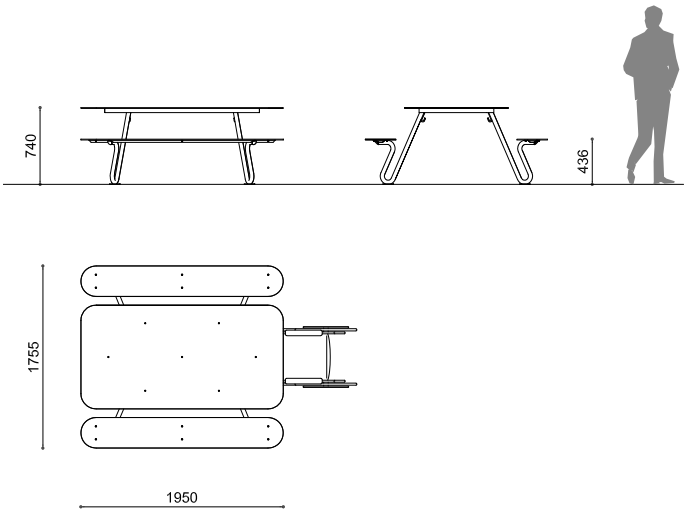

technical data

1950x1755 mm
H 740 mm h 436 mm

72 kg

Galvanised and powder coated steel
HPL

Prepared with holes Ø 12 mm for ground fixing with mechanical dowels (not included)

CITY DESIGN is a brand of Metalco Srl
via della Fornace, 44
31023 Castelminio di Resana (TV) Italy

Subject to management and coordination activities of Holding Agora SAS

T + 39 0423.7863
F + 39 0423. 786400
citydesign.it | info@citydesign.it

Metalco Srl reserves the right to modify the technical characteristics indicated above without notice