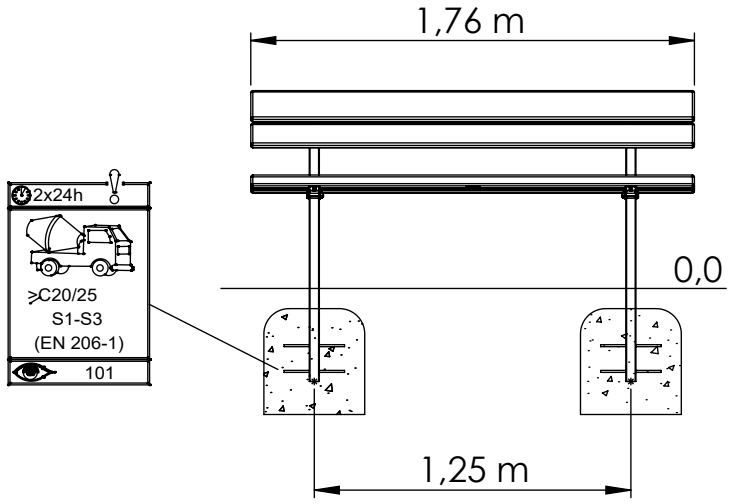

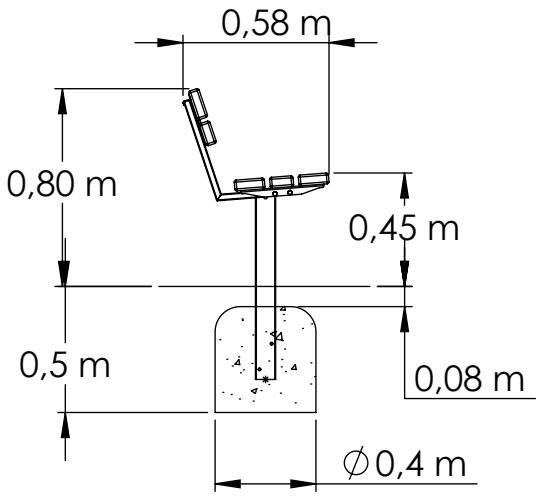



0,5 h

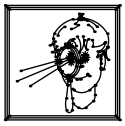

Varje vecka
Every week
Jede woche
Chaque semaine



Varje säsong
Every season
Jedes Jahr
Chaque saison

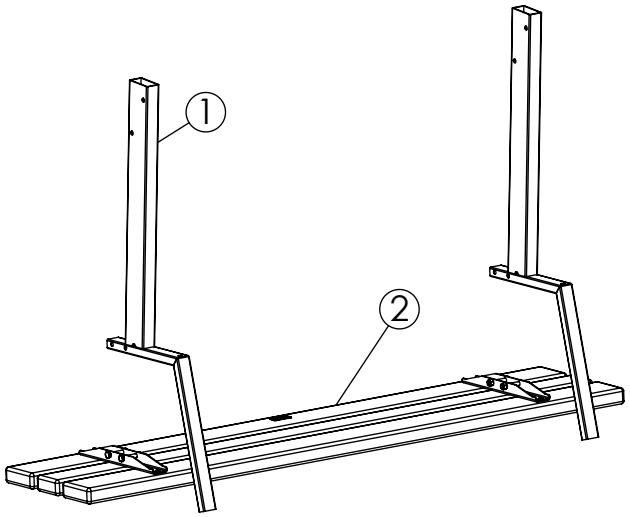

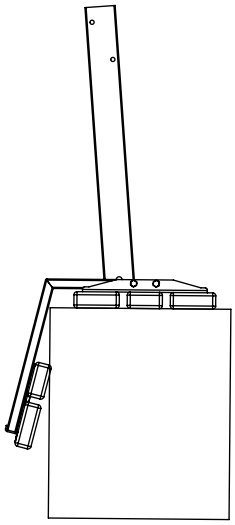

1

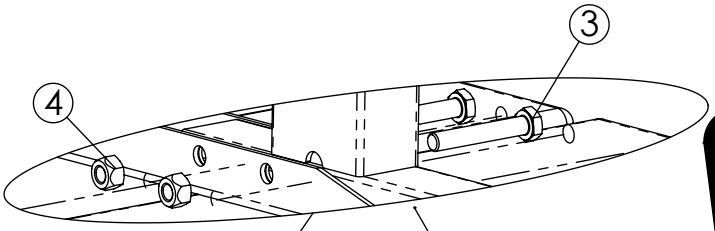

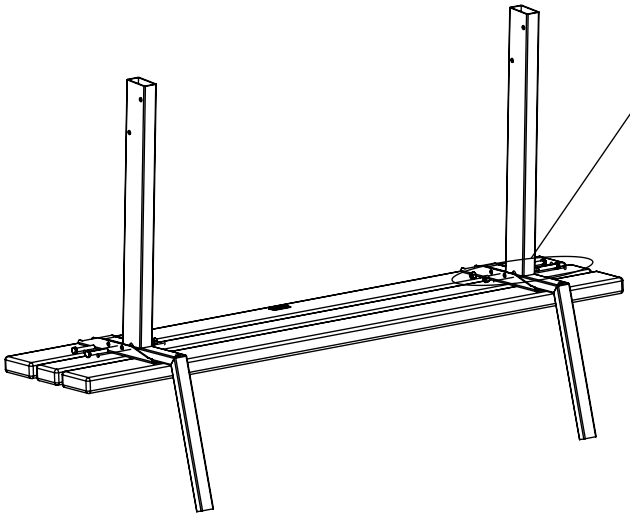

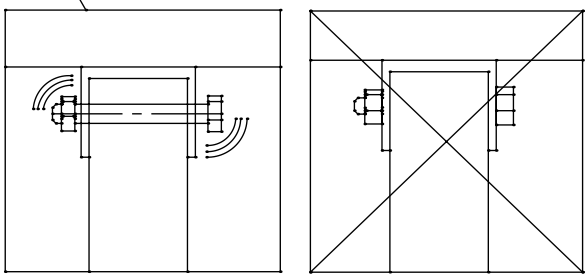

NR.	Description MA	Item Number	Qty
1	1104 x 441 x 40 mm	SW26561	2
2	1760 x 375 x 78 mm	SW117472	1
3	ISO4014-M10x60-8.8	8008383	4
4	ISO7042-M10-8	8008786	4

HAGS
ANEBY, SWEDEN
+46(0)380–47300
www.hags.com

Sofa Ekeby CC, Thermo

MASW117499

1 (2)

HB	KS	2026-03-02	0	

2

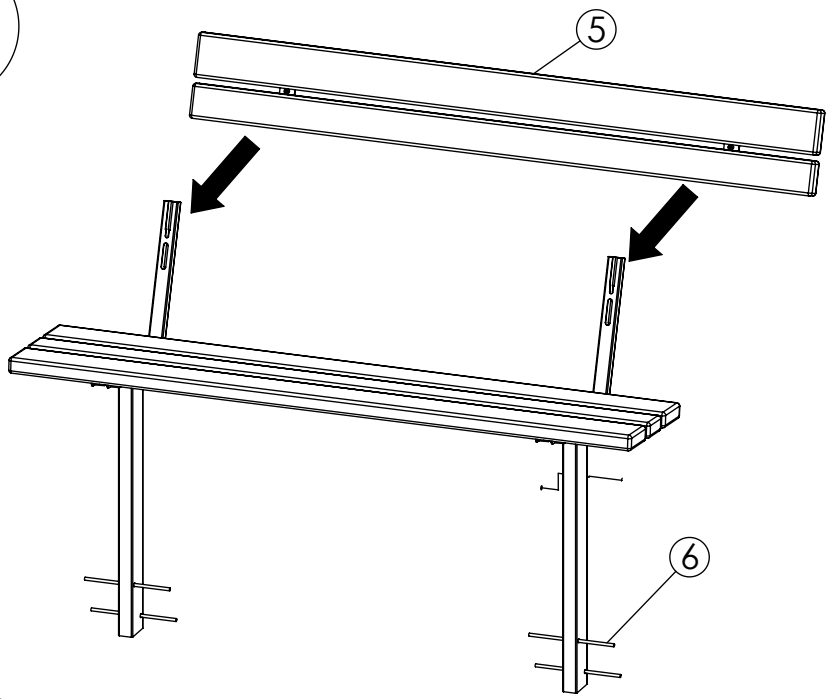

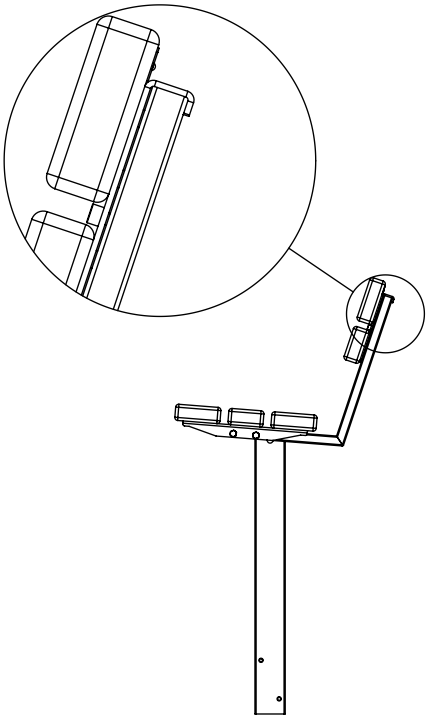

3

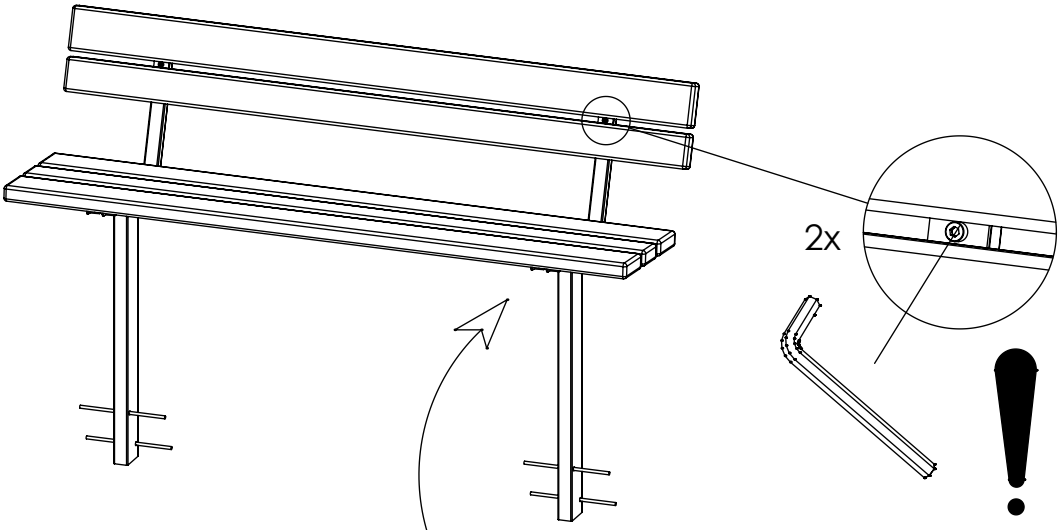

4

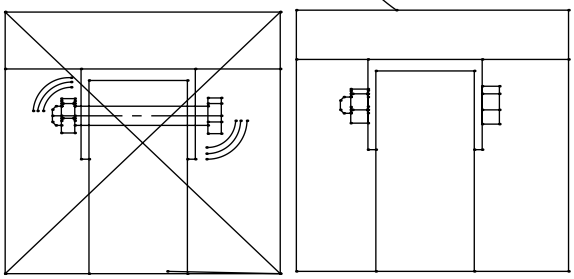

NR.	Description MA	Item Number	QTY
5	1760 x 229 x 78 mm	SW117471	1
6	Ø8 x 240 mm	8014967	4

HAGS

ANEBY, SWEDEN
+46(0)380–47300
www.hags.com

Sofa Ekeby CC, Thermo

MASW117499

2 (2)

HB	KS	2026-03-02	0	