HAGS®

Ekeby Bench Wall Top, Thermo

MASW117690

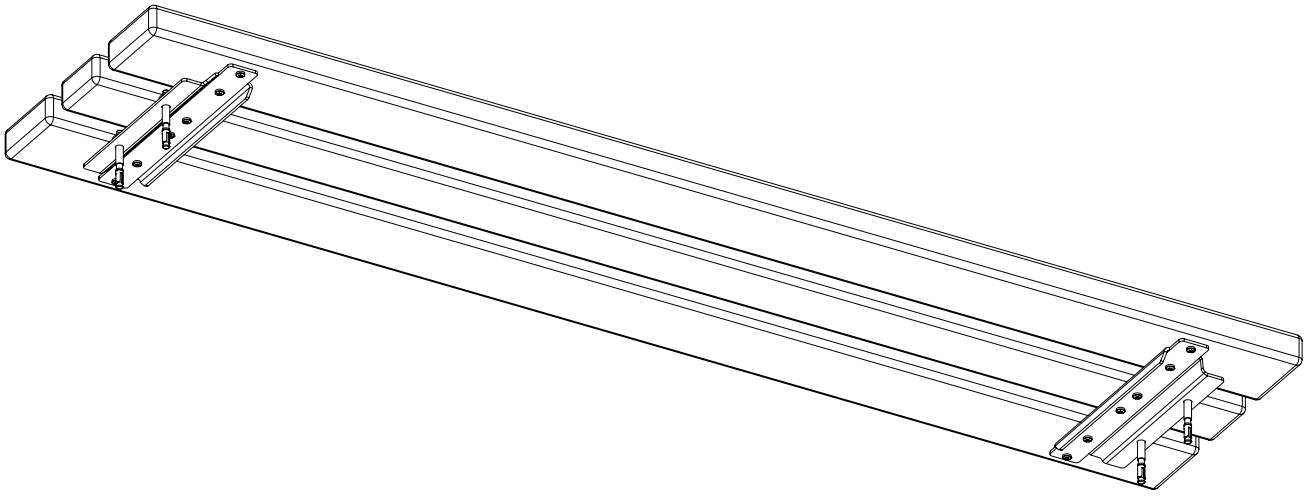

OM



© Playpower inc
hags@hags.com
www.hags.com

1	SW117691		1**x**	1760 x 393 x 43	11.20**kg**
2	8008561		4**x**	M10x86 HDG	0.04**kg**

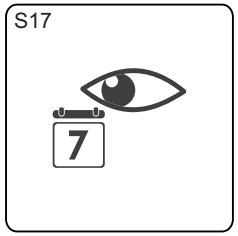





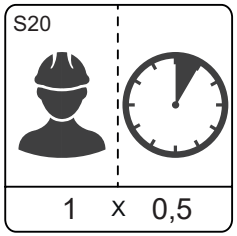

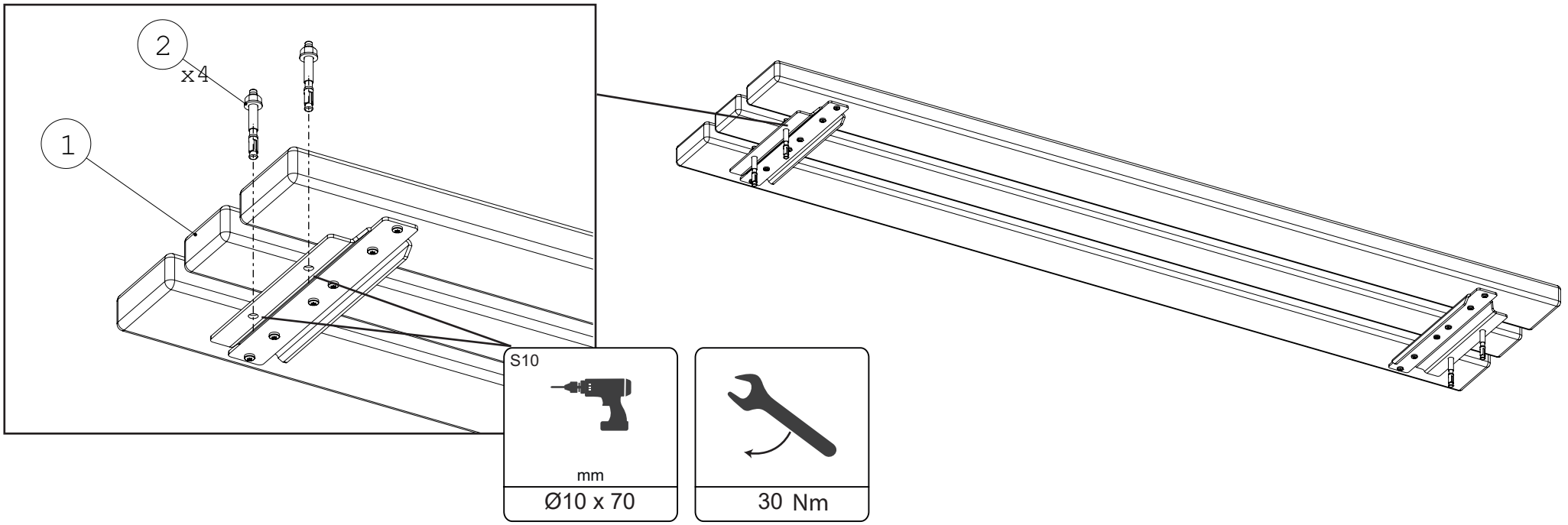

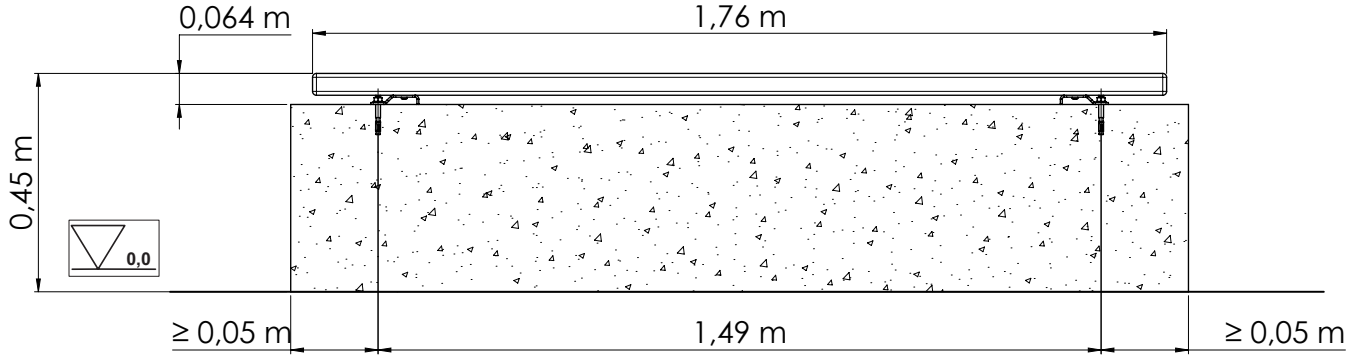

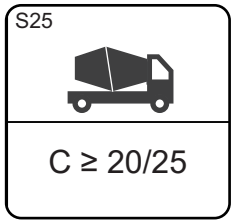

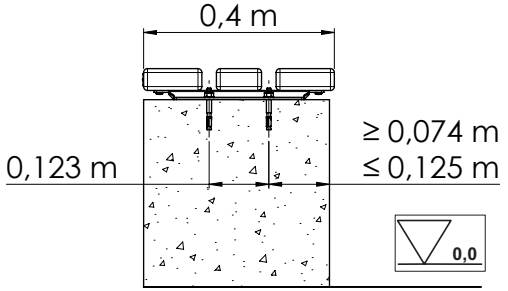

© Playpower inc
hags@hags.com
www.hags.com

Ekeby Top Wall Bench
MASW117690

Rev: 0
02/03/26